S.p.A. AUTOVIE VENETE
34143 TRIESTE - Via V. Locchi, 19 - tel. 040/3189111
Società soggetta all'attività di direzione e coordinamento da parte di
Friulia S.p.A. - Finanziaria Regionale Friuli-Venezia Giulia
CONCESSIONARIA AUTOSTRADE
A4 VENEZIA - TRIESTE
A23 PALMANOVA - UDINE
A28 PORTOGRUARO - CONEGLIANO
A34 VILLESSE - GORIZIA

# AUTOSTRADA A34 VILLESSE - GORIZIA
# AREA DI DEPURAZIONE 8700 GV

## OPERE DI COMPLETAMENTO

Generale

Area di depurazione 8700 GV
Sezioni trasversali

1:350

TEMATICA
A

N. ALLEGATO e SUB.ALL.
02.02 . 0.1

| REV. | DATA | DESCRIZIONE | REDATTO | VERIFICATO | APPROVATO |
|---|---|---|---|---|---|
| 3 | | | | | |
| 2 | | | | | |
| 1 | 07.11.2017 | STRALCIO OPERE A VERDE | | | |
| 0 | 29.09.2017 | PRIMA EMISSIONE | | | |

IL PROGETTISTA:
dott. ing. Aldo Urban

IL RESPONSABILE U.O. PROGETTAZIONE
dott. ing. Edoardo Pella

IL RESPONSABILE UNICO DEL PROCEDIMENTO:
dott. ing. Enrico Razzini

NOME FILE:
A0202011.pdf

DATA PROGETTO:
07.11.2017

| CODICE MASTRO | ANNO | N.PROGETTO | REVISIONE |
|---|---|---|---|
| | 17 | - | 1 |

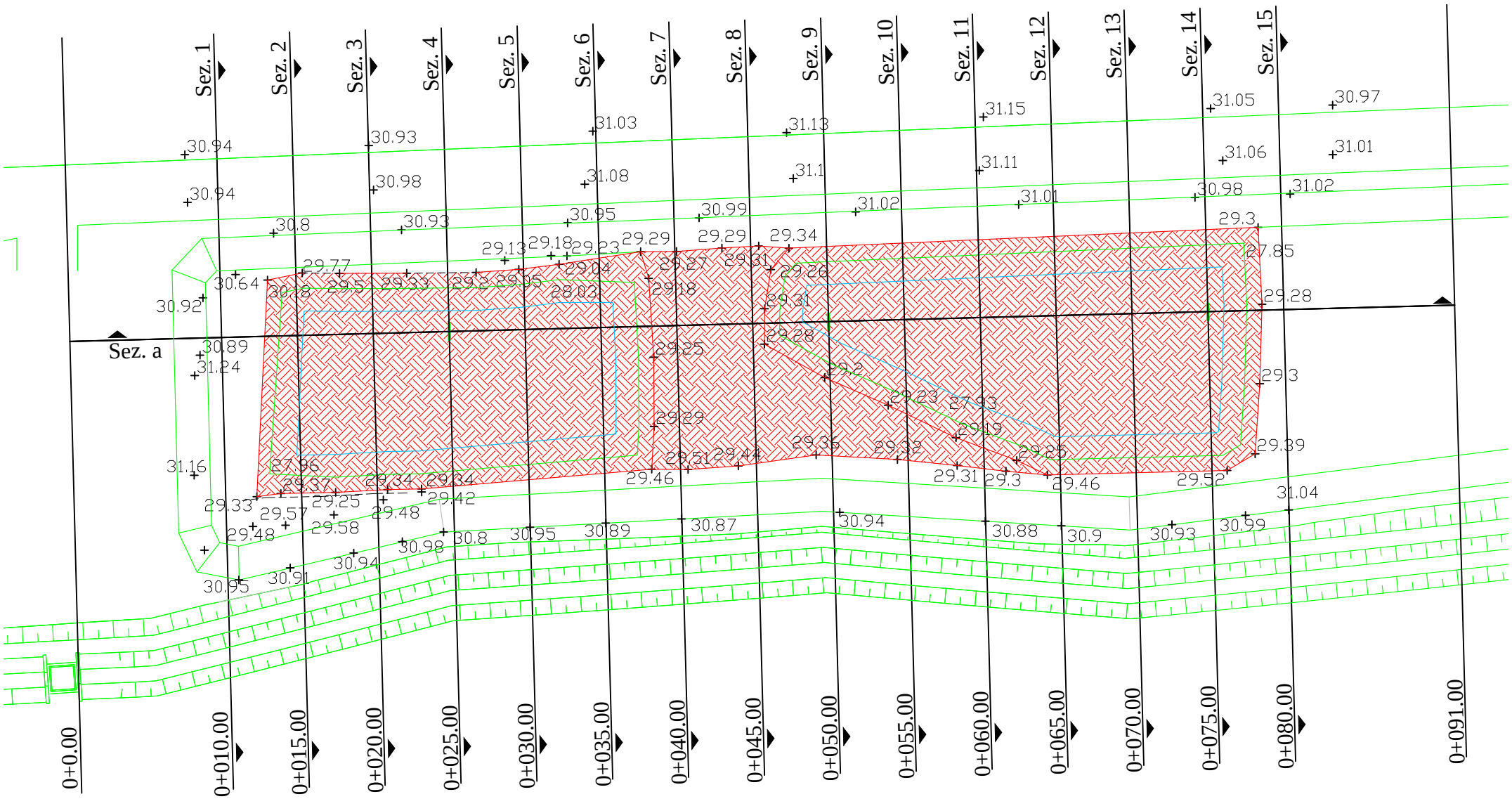


LEGENDA

STATO DI FATTO : TERRENO

STATO DI FATTO : FONDO VASCHE

PROGETTO

RINTERRO DI PROGETTO

# *Planimetria di rilievo*

PROFILO LONGITUDINALE

SEZIONE a

PROGRESSIVA 0.00

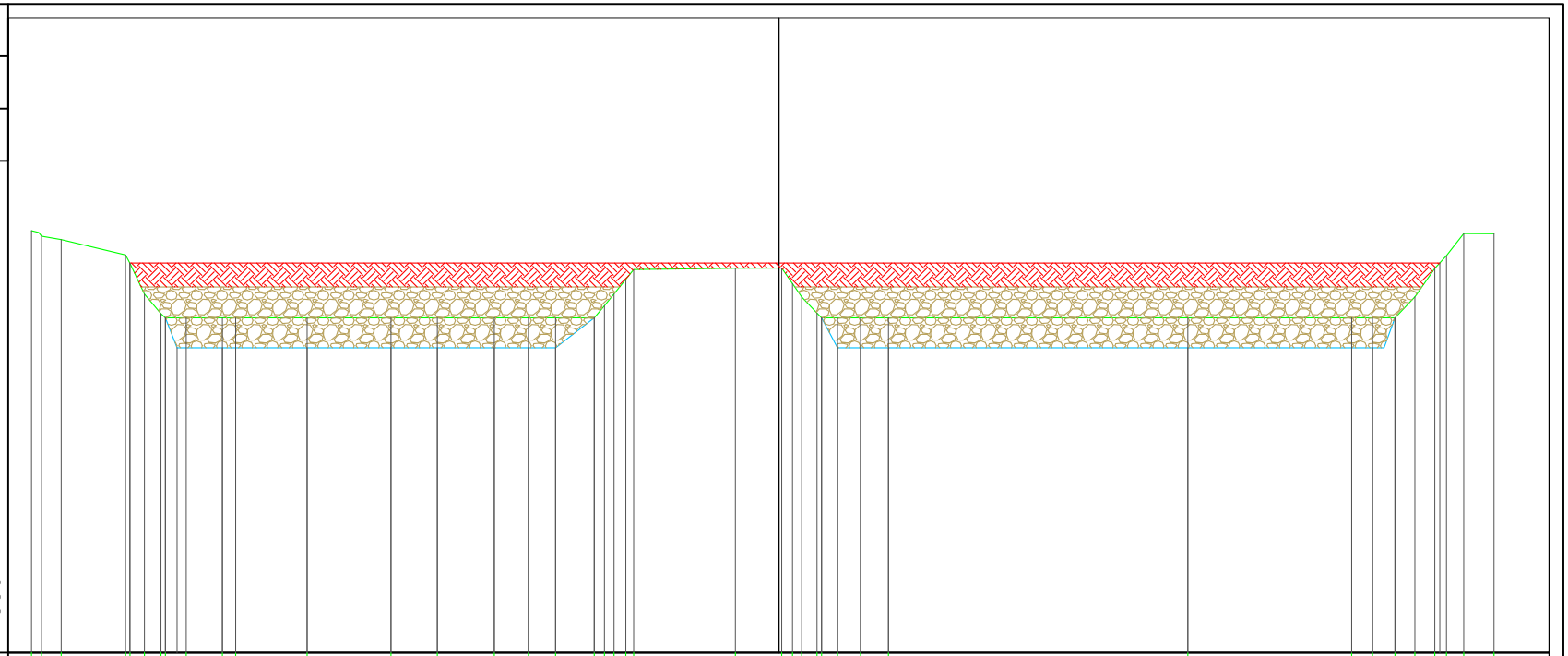


| | |
|---|---|
| PROGRESSIVE TERRENO | 37.50 37.00 36.02 32.79 32.56 31.84 31.00 30.78 29.74 27.92 27.26 23.67 19.46 17.14 14.28 12.56 11.20 9.26 8.75 8.27 7.68 7.28 2.18 0.15 0.69 1.15 1.92 2.15 2.95 4.10 5.50 20.53 28.75 29.80 30.92 31.92 32.92 33.51 34.38 35.90 |
| PARZIALI TERRENO | 0.50 0.98 3.23 0.23 0.72 0.84 0.22 1.04 1.82 0.66 3.59 4.21 2.32 2.86 1.72 1.36 1.94 0.51 0.48 0.59 0.40 5.10 2.33 0.54 0.46 0.77 0.23 0.80 1.15 1.40 15.03 8.22 1.05 1.12 1.00 1.00 0.59 0.87 1.52 |
| QUOTE TERRENO | 31.17 30.90 30.72 29.96 29.53 27.99 27.01 26.80 26.80 26.80 26.80 26.80 26.80 26.80 26.80 26.80 26.80 26.80 27.41 28.00 28.73 29.22 29.29 29.30 28.52 27.85 27.04 26.80 26.80 26.80 26.80 26.80 26.80 26.80 26.80 27.85 29.28 29.92 31.03 31.02 |
| PROGRESSIVE FONDO | 30.78 30.20 27.92 27.26 23.67 19.46 17.14 14.28 12.56 11.20 9.26 2.15 2.95 4.10 5.50 20.53 28.75 29.80 30.92 |
| PARZIALI FONDO | 0.58 2.28 0.66 3.59 4.21 2.32 2.86 1.72 1.36 1.94 0.80 1.15 1.40 15.03 8.22 1.05 1.12 |
| QUOTE FONDO | 26.80 25.30 25.30 25.30 25.30 25.30 25.30 25.30 25.30 25.30 26.80 26.80 25.30 25.30 25.30 25.30 25.30 26.80 |
| PROGRESSIVE PROGETTO | 32.57 33.17 |
| PARZIALI PROGETTO | 65.74 |
| QUOTE PROGETTO | 29.55 29.55 |

PROFILO TRASVERSALE

SEZIONE 1

PROGRESSIVA 10.00

14

350

350

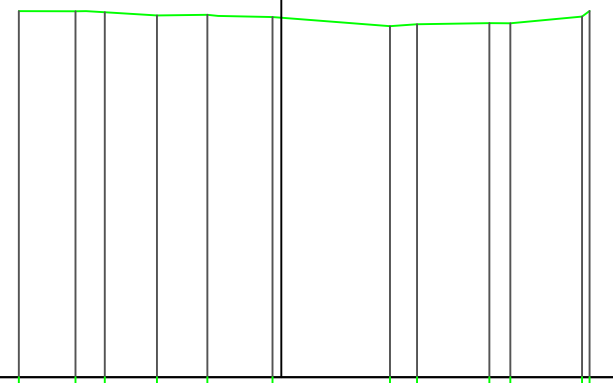


| | |
|---|---|
| PROGRESSIVE TERRENO | 12.15 9.53 8.18 5.76 3.43 0.41 5.03 6.28 9.63 10.60 13.92 14.27 |
| PARZIALI TERRENO | 2.62 1.35 2.42 2.33 3.02 5.44 1.25 3.35 0.97 3.32 0.35 |
| QUOTE TERRENO | 30.94 30.93 30.89 30.74 30.77 30.66 30.24 30.33 30.38 30.38 30.69 30.95 |
| PROGRESSIVE FONDO | |
| PARZIALI FONDO | |
| QUOTE FONDO | |
| PROGRESSIVE PROGETTO | |
| PARZIALI PROGETTO | |
| QUOTE PROGETTO | |

PROFILO TRASVERSALE

SEZIONE 2

PROGRESSIVA 15.00

| | | |
|---|---|---|
| RI RINTERRO TOTALE | $m^2$ | 48.57 |
| RR RINTERRO RILEVATO | $m^2$ | 32.10 |
| RV RINTERRO VEGETALE | $m^2$ | 16.47 |

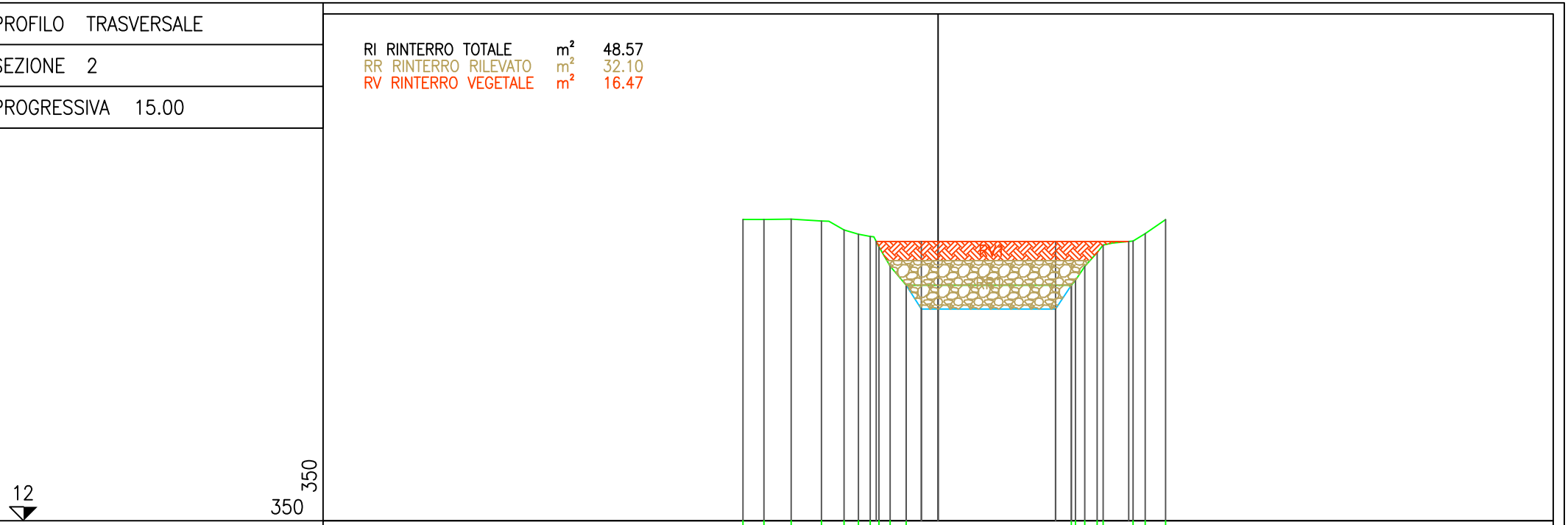


| | | | | | | | | | | | | | | | | | | | | | | | | | |
|---|---|---|---|---|---|---|---|---|---|---|---|---|---|---|---|---|---|---|---|---|---|---|---|---|---|
| PROGRESSIVE TERRENO | 12.27 | 10.95 | 9.24 | 7.34 | 5.92 | 5.01 | 4.27 | 3.72 | 3.02 | 2.01 | | | | | | | 8.38 | 8.64 | 9.22 | 10.00 | 10.38 | 12.26 | 13.02 | 14.30 | |
| PARZIALI TERRENO | 1.32 | 1.71 | 1.90 | 1.42 | 0.91 | 0.74 | 0.55 | 0.70 | 1.01 | | 10.39 | | | | | 0.26 | 0.58 | 0.78 | 0.38 | 1.88 | 0.76 | 1.28 | | | |
| QUOTE TERRENO | 30.93 | 30.93 | 30.96 | 30.84 | 30.28 | 30.01 | 29.87 | 29.22 | 28.00 | 26.80 | | | | | | 26.80 | 27.11 | 27.98 | 28.85 | 29.33 | 29.58 | 30.05 | 30.92 | | |
| PROGRESSIVE FONDO | | | | | | | | | | 2.01 | 1.05 | 0.00 | | | | 7.38 | 8.38 | | | | | | | | |
| PARZIALI FONDO | | | | | | | | | | 0.96 | 1.05 | | 7.38 | | | | 1.00 | | | | | | | | |
| QUOTE FONDO | | | | | | | | | | 26.80 | 25.30 | 25.30 | | | | 25.30 | 26.80 | | | | | | | | |
| PROGRESSIVE PROGETTO | | | | | | | | 3.89 | | | 1.05 | 0.00 | | | | 7.38 | | | | | 11.98 | | | | |
| PARZIALI PROGETTO | | | | | | | | | 2.84 | | 1.05 | | 7.38 | | | | | 4.60 | | | | | | | |
| QUOTE PROGETTO | | | | | | | | 29.55 | | | 29.55 | 29.55 | | | | 29.55 | | | | | 29.55 | | | | |

PROFILO TRASVERSALE

SEZIONE 3

PROGRESSIVA 20.00

| | | |
|---|---|---|
| RI RINTERRO TOTALE | $m^2$ | 48.42 |
| RR RINTERRO RILEVATO | $m^2$ | 31.83 |
| RV RINTERRO VEGETALE | $m^2$ | 16.58 |

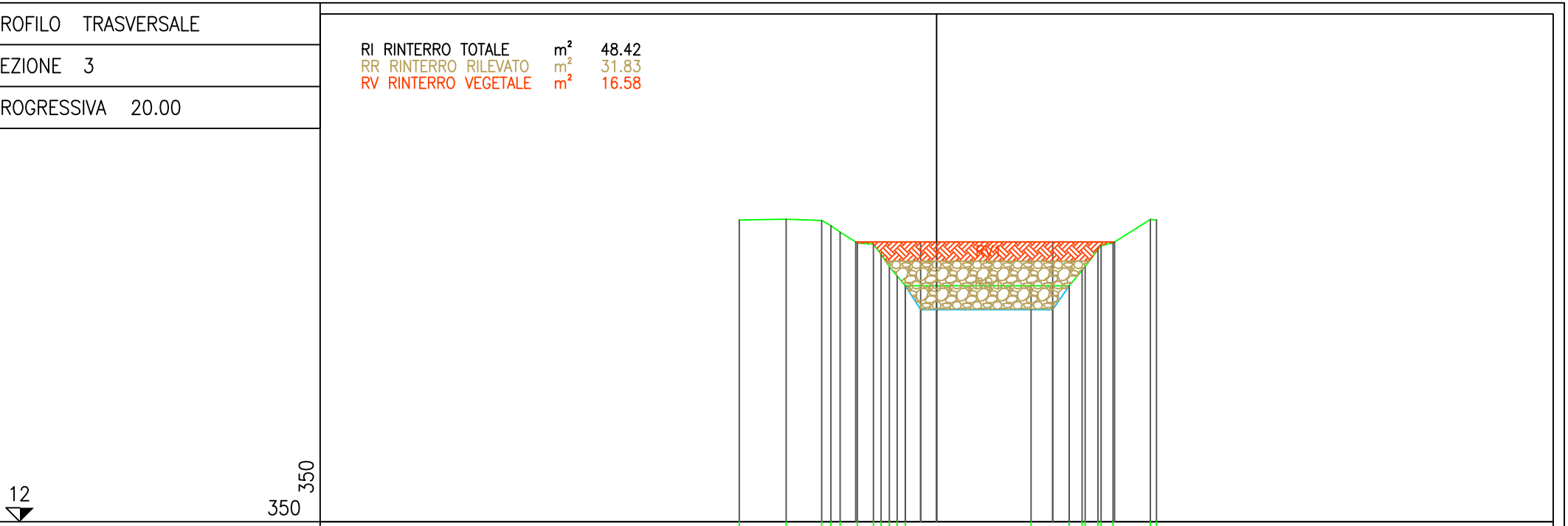


| | | | | | | | | | | | | | | | | | | | | | | | | | |
|---|---|---|---|---|---|---|---|---|---|---|---|---|---|---|---|---|---|---|---|---|---|---|---|---|---|
| PROGRESSIVE TERRENO | 12.38 | 9.44 | 7.21 | 6.63 | 6.06 | 4.97 | 3.97 | 3.49 | 2.97 | 2.48 | 1.97 | 5.92 | 8.31 | 9.12 | 9.32 | 10.12 | 10.32 | 11.07 | 13.41 | 13.79 | | | | | |
| PARZIALI TERRENO | 2.94 | 2.23 | 0.58 | 0.57 | 1.09 | 1.00 | 0.48 | 0.52 | 0.49 | 0.51 | 7.89 | 2.39 | 0.81 | 0.20 | 0.80 | 0.20 | 0.75 | 2.34 | 0.38 | | | | | | |
| QUOTE TERRENO | 30.93 | 30.98 | 30.90 | 30.57 | 30.16 | 29.48 | 29.42 | 28.78 | 28.00 | 27.42 | 26.80 | 26.80 | 26.80 | 27.77 | 28.00 | 29.08 | 29.32 | 29.49 | 30.97 | 30.93 | | | | | |
| PROGRESSIVE FONDO | | | | | | | | | 1.97 | 1.00 | 0.00 | | 7.28 | 8.31 | | | | | | | | | | | |
| PARZIALI FONDO | | | | | | | | | 0.97 | 1.00 | | 7.28 | | 1.03 | | | | | | | | | | | |
| QUOTE FONDO | | | | | | | | | 26.80 | 25.30 | 25.30 | | 25.30 | 26.80 | | | | | | | | | | | |
| PROGRESSIVE PROGETTO | | | | | | 5.07 | | | 1.00 | 0.00 | | | 7.28 | | | | 11.17 | | | | | | | | |
| PARZIALI PROGETTO | | | | | | 4.07 | | | 1.00 | | | 7.28 | | | 3.89 | | | | | | | | | | |
| QUOTE PROGETTO | | | | | | 29.55 | | | 29.55 | 29.55 | | | 29.55 | | | | 29.55 | | | | | | | | |

PROFILO TRASVERSALE

SEZIONE 4

PROGRESSIVA 25.00

| | | |
|---|---|---|
| RI RINTERRO TOTALE | $m^2$ | 47.40 |
| RR RINTERRO RILEVATO | $m^2$ | 30.92 |
| RV RINTERRO VEGETALE | $m^2$ | 16.48 |

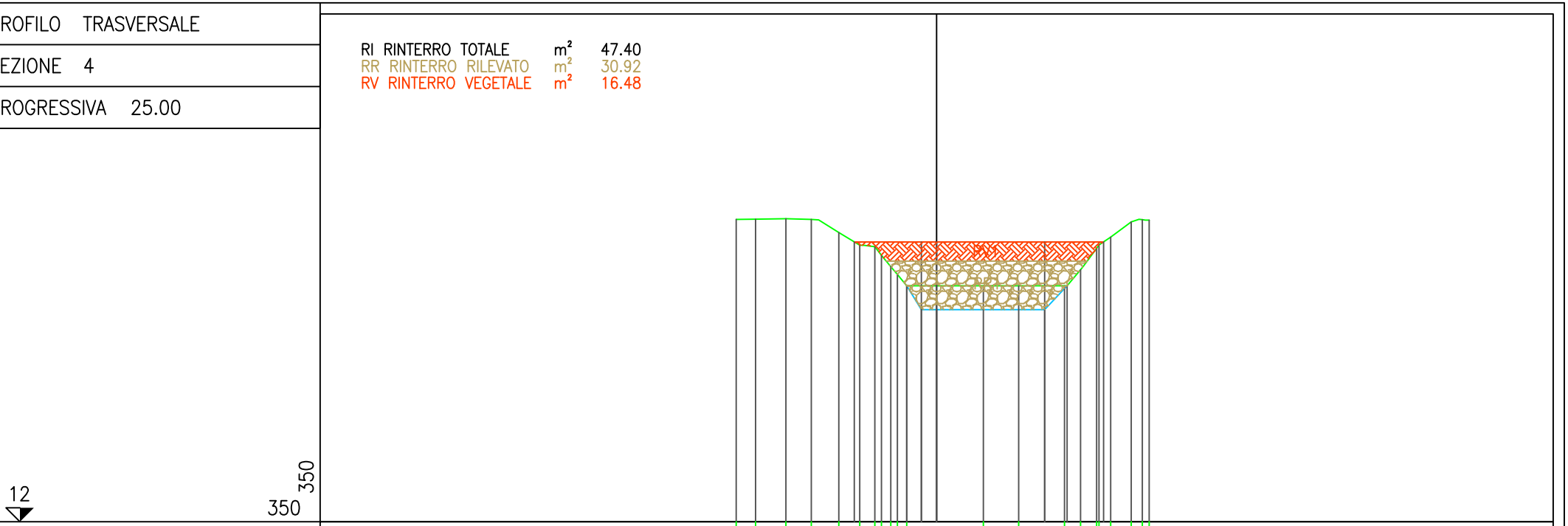


| | | | | | | | | | | | | | | | | | | | | | | | | | |
|---|---|---|---|---|---|---|---|---|---|---|---|---|---|---|---|---|---|---|---|---|---|---|---|---|---|
| PROGRESSIVE TERRENO | 12.57 | 11.36 | 9.46 | 7.86 | 6.14 | 4.83 | 3.87 | 3.47 | 2.87 | 2.46 | 1.87 | 2.93 | 5.14 | 8.02 | 9.03 | 10.04 | 10.19 | 10.92 | 12.21 | 12.90 | 13.34 | | | | |
| PARZIALI TERRENO | 1.21 | 1.90 | 1.60 | 1.72 | 1.31 | 0.96 | 0.40 | 0.60 | 0.41 | 0.59 | 4.80 | 2.21 | 2.88 | 1.01 | 1.01 | 0.15 | 0.73 | 1.29 | 0.69 | 0.44 | | | | | |
| QUOTE TERRENO | 30.96 | 30.98 | 31.01 | 30.96 | 30.14 | 29.35 | 29.25 | 28.71 | 28.00 | 27.51 | 26.80 | 26.80 | 26.80 | 26.80 | 27.81 | 29.15 | 29.36 | 29.85 | 30.80 | 30.95 | 30.92 | | | | |
| PROGRESSIVE FONDO | | | | | | | | | | 1.87 | 0.95 | 0.00 | | 6.78 | 8.18 | | | | | | | | | | |
| PARZIALI FONDO | | | | | | | | | | 0.92 | 0.95 | 6.78 | | | 1.40 | | | | | | | | | | |
| QUOTE FONDO | | | | | | | | | | 26.80 | 25.30 | 25.30 | | 25.30 | 26.80 | | | | | | | | | | |
| PROGRESSIVE PROGETTO | | | | | | 5.17 | | | | 0.95 | 0.00 | | | 6.78 | | | 10.47 | | | | | | | | |
| PARZIALI PROGETTO | | | | | | | 4.22 | | | 0.95 | | 6.78 | | | 3.69 | | | | | | | | | | |
| QUOTE PROGETTO | | | | | | 29.55 | | | | 29.55 | 29.55 | | | 29.55 | | | 29.55 | | | | | | | | |

PROFILO TRASVERSALE

SEZIONE 5

PROGRESSIVA 30.00

| | | |
|---|---|---|
| RI RINTERRO TOTALE | $m^2$ | 46.69 |
| RR RINTERRO RILEVATO | $m^2$ | 30.19 |
| RV RINTERRO VEGETALE | $m^2$ | 16.50 |

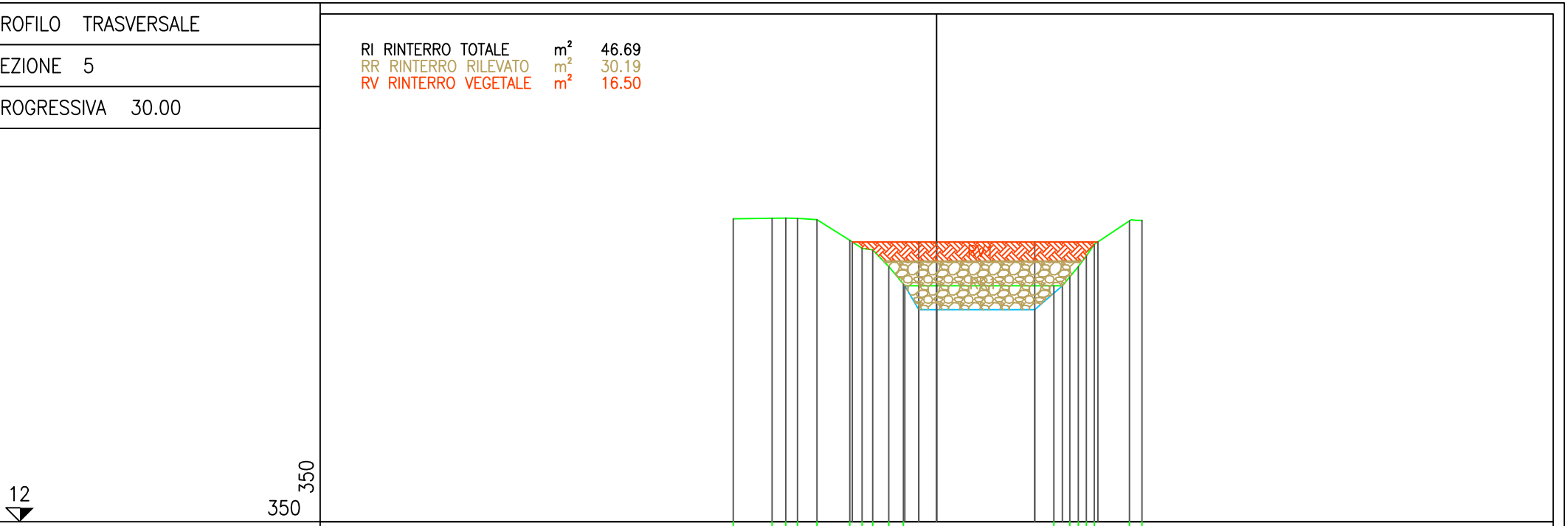


| | | | | | | | | | | | | | | | | | | | | | | | |
|---|---|---|---|---|---|---|---|---|---|---|---|---|---|---|---|---|---|---|---|---|---|---|---|
| PROGRESSIVE TERRENO | 12.76 | | 10.33 | 9.46 | 8.73 | 7.51 | | 5.45 | 4.68 | 4.01 | 3.00 | 2.09 | | | | | 7.35 | 8.36 | 8.89 | 9.39 | 9.89 | 12.10 | 12.88 |
| PARZIALI TERRENO | | 2.43 | 0.87 | 0.73 | 1.22 | 2.06 | | 0.77 | 0.67 | 1.01 | 0.91 | | 9.44 | | | | 1.01 | 0.53 | 0.50 | 0.50 | 2.21 | 0.78 | |
| QUOTE TERRENO | 31.00 | | 31.03 | 31.05 | 31.03 | 30.94 | | 29.65 | 29.15 | 29.05 | 28.00 | 26.91 | | | | | 26.80 | 27.36 | 28.00 | 28.68 | 29.40 | 30.88 | 30.90 |
| PROGRESSIVE FONDO | | | | | | | | | | | -2.00 | -1.12 | 0.00 | | | | 6.15 | 7.89 | | | | | |
| PARZIALI FONDO | | | | | | | | | | | 0.88 | 1.12 | | 6.15 | | | 1.74 | | | | | | |
| QUOTE FONDO | | | | | | | | | | | 26.80 | 25.30 | 25.30 | | | | 25.30 | 26.80 | | | | | |
| PROGRESSIVE PROGETTO | | | | | | | | -5.29 | | | -1.12 | 0.00 | | | | | 6.15 | | | 10.12 | | | |
| PARZIALI PROGETTO | | | | | | | | | 4.17 | | 1.12 | | 6.15 | | | | | 3.97 | | | | | |
| QUOTE PROGETTO | | | | | | | | 29.55 | | | 29.55 | 29.55 | | | | | 29.55 | | | 29.55 | | | |

PROFILO TRASVERSALE

SEZIONE 6

PROGRESSIVA 35.00

| | | |
|---|---|---|
| RI RINTERRO TOTALE | $m^2$ | 45.38 |
| RR RINTERRO RILEVATO | $m^2$ | 29.40 |
| RV RINTERRO VEGETALE | $m^2$ | 15.98 |

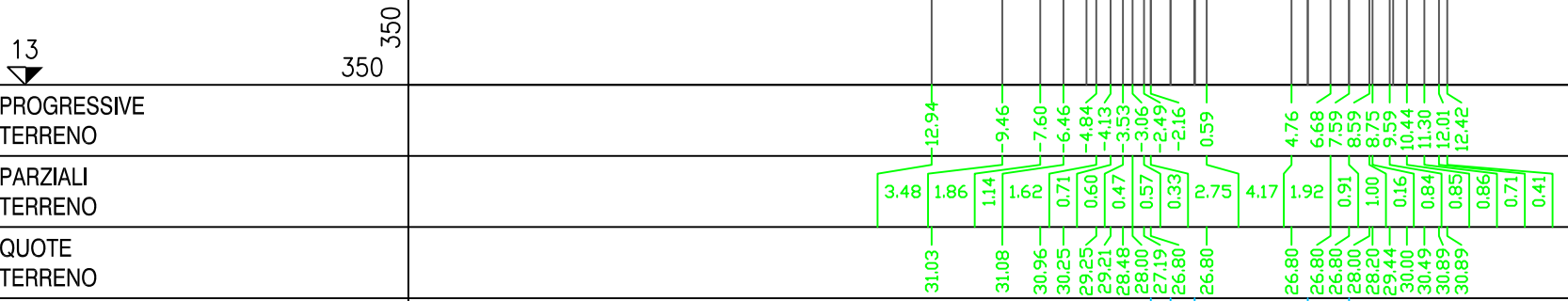


| | |
|---|---|
| PROGRESSIVE TERRENO | -12.94 -9.46 -7.60 -6.46 -4.84 -4.13 -3.53 -3.06 -2.49 -2.16 0.59 4.76 6.68 7.59 8.59 8.75 9.59 10.44 11.30 12.01 12.42 |
| PARZIALI TERRENO | 3.48 1.86 1.14 1.62 0.71 0.60 0.47 0.57 0.33 2.75 4.17 1.92 0.91 1.00 0.16 0.84 0.85 0.86 0.71 0.41 |
| QUOTE TERRENO | 31.03 31.08 30.96 30.25 29.25 29.21 28.48 28.00 27.19 26.80 26.80 26.80 26.80 26.80 28.00 28.20 29.44 30.00 30.49 30.89 30.89 |
| PROGRESSIVE FONDO | -2.16 -1.19 0.00 5.56 7.59 |
| PARZIALI FONDO | 0.97 1.19 5.56 2.03 |
| QUOTE FONDO | 26.80 25.30 25.30 25.30 26.80 |
| PROGRESSIVE PROGETTO | -5.32 -1.19 0.00 5.56 9.77 |
| PARZIALI PROGETTO | 4.13 1.19 5.56 4.21 |
| QUOTE PROGETTO | 29.55 29.55 29.55 29.55 29.55 |

PROFILO TRASVERSALE

SEZIONE 7

PROGRESSIVA 40.00

RI RINTERRO TOTALE $m^2$ 3.93
RV RINTERRO VEGETALE $m^2$ 3.93

14 350 350

| | |
|---|---|
| PROGRESSIVE TERRENO | 12.77 11.57 9.47 8.09 6.51 4.88 2.64 1.40 5.42 7.44 8.84 9.48 11.35 11.93 11.97 |
| PARZIALI TERRENO | 1.20 2.10 1.38 1.58 1.63 2.24 4.04 4.02 2.02 1.40 0.64 1.87 0.58 0.04 |
| QUOTE TERRENO | 31.07 31.06 31.09 31.01 30.27 29.27 29.21 29.26 29.28 29.33 29.45 29.50 30.55 30.87 30.87 |
| PROGRESSIVE FONDO | |
| PARZIALI FONDO | |
| QUOTE FONDO | |
| PROGRESSIVE PROGETTO | 5.34 3.50 0.00 3.50 9.57 |
| PARZIALI PROGETTO | 1.84 3.50 3.50 6.07 |
| QUOTE PROGETTO | 29,55 29,55 29,55 29,55 29,55 |

PROFILO TRASVERSALE

SEZIONE 8

PROGRESSIVA 45.00

RI RINTERRO TOTALE $m^2$ 3.28
RV RINTERRO VEGETALE $m^2$ 3.28

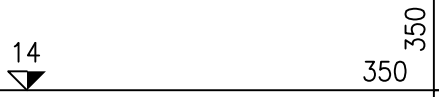


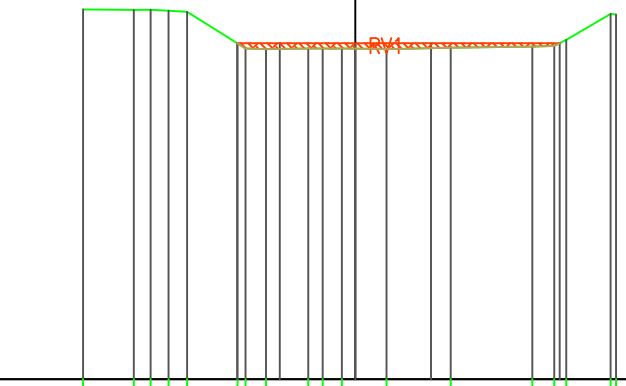


| | |
|---|---|
| PROGRESSIVE TERRENO | 12.60 10.26 9.48 8.64 7.79 5.46 5.09 4.13 2.18 1.51 0.63 1.44 4.42 8.19 9.21 9.76 11.81 12.06 |
| PARZIALI TERRENO | 2.34 0.78 0.84 0.85 2.33 0.37 0.96 1.95 0.67 0.88 2.07 2.98 3.77 1.02 0.55 2.05 0.25 |
| QUOTE TERRENO | 31.11 31.09 31.10 31.05 31.00 29.54 29.31 29.27 29.31 29.31 29.30 29.28 29.34 29.39 29.42 29.71 30.90 30.87 |
| PROGRESSIVE FONDO | |
| PARZIALI FONDO | |
| QUOTE FONDO | |
| PROGRESSIVE PROGETTO | 5.47 3.50 0.00 3.50 9.46 |
| PARZIALI PROGETTO | 1.97 3.50 3.50 5.96 |
| QUOTE PROGETTO | 29.55 29.55 29.55 29.55 29.55 |

PROFILO TRASVERSALE

SEZIONE 9

PROGRESSIVA 50.00

| | | |
|---|---|---|
| RI RINTERRO TOTALE | $m^2$ | 26.17 |
| RR RINTERRO RILEVATO | $m^2$ | 14.82 |
| RV RINTERRO VEGETALE | $m^2$ | 11.35 |

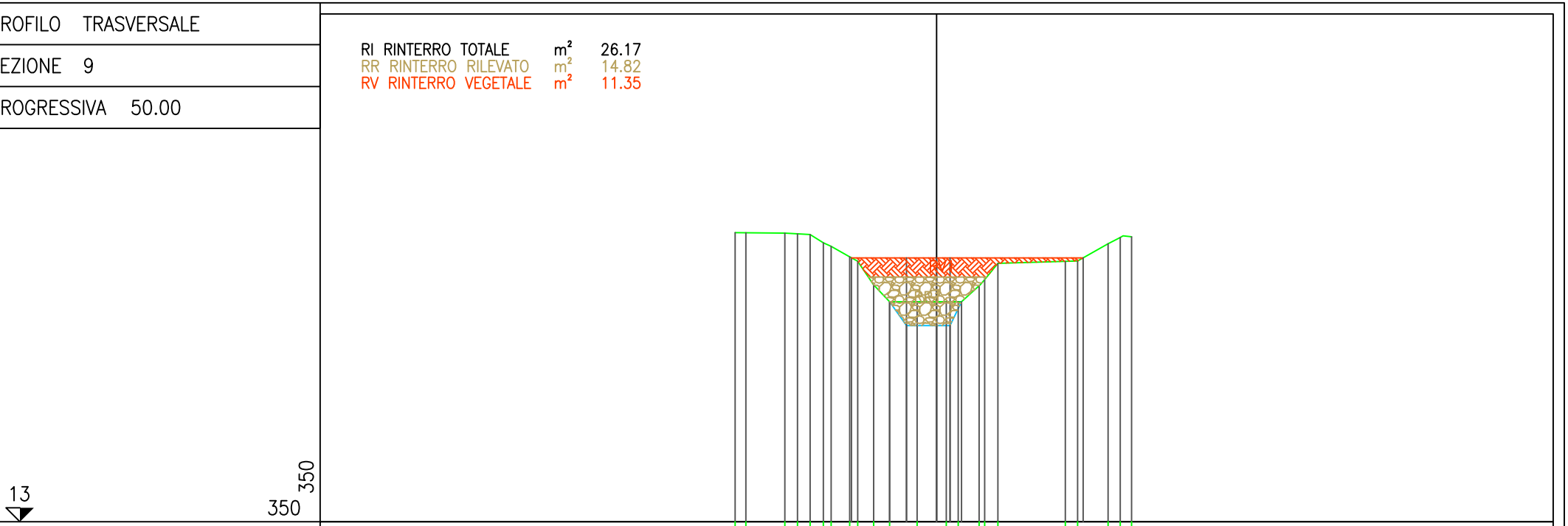


| | |
|---|---|
| PROGRESSIVE TERRENO | 12.64 11.97 9.52 8.73 7.94 7.10 6.62 5.46 4.95 3.95 2.95 1.22 0.60 1.35 2.67 3.01 3.84 8.08 8.84 10.76 11.52 12.23 |
| PARZIALI TERRENO | 0.67 2.45 0.79 0.79 0.84 0.48 1.16 0.51 1.00 1.00 1.73 1.82 0.75 1.32 0.34 0.83 4.24 0.76 1.92 0.76 0.71 |
| QUOTE TERRENO | 31.13 31.13 31.11 31.06 31.01 30.49 30.27 29.61 29.34 27.85 26.80 26.80 26.80 26.80 27.80 28.19 29.21 29.33 29.35 30.44 30.83 30.87 |
| PROGRESSIVE FONDO | 2.95 1.89 0.00 0.84 1.56 |
| PARZIALI FONDO | 1.06 1.89 0.84 0.72 |
| QUOTE FONDO | 26.80 25.30 25.30 25.30 26.80 |
| PROGRESSIVE PROGETTO | 5.34 1.89 0.00 0.84 9.19 |
| PARZIALI PROGETTO | 3.45 1.89 0.84 8.35 |
| QUOTE PROGETTO | 29.55 29.55 29.55 29.55 29.55 |

PROFILO TRASVERSALE

SEZIONE 10

PROGRESSIVA 55.00

| | | |
|---|---|---|
| RI RINTERRO TOTALE | $m^2$ | 35.97 |
| RR RINTERRO RILEVATO | $m^2$ | 22.13 |
| RV RINTERRO VEGETALE | $m^2$ | 13.85 |

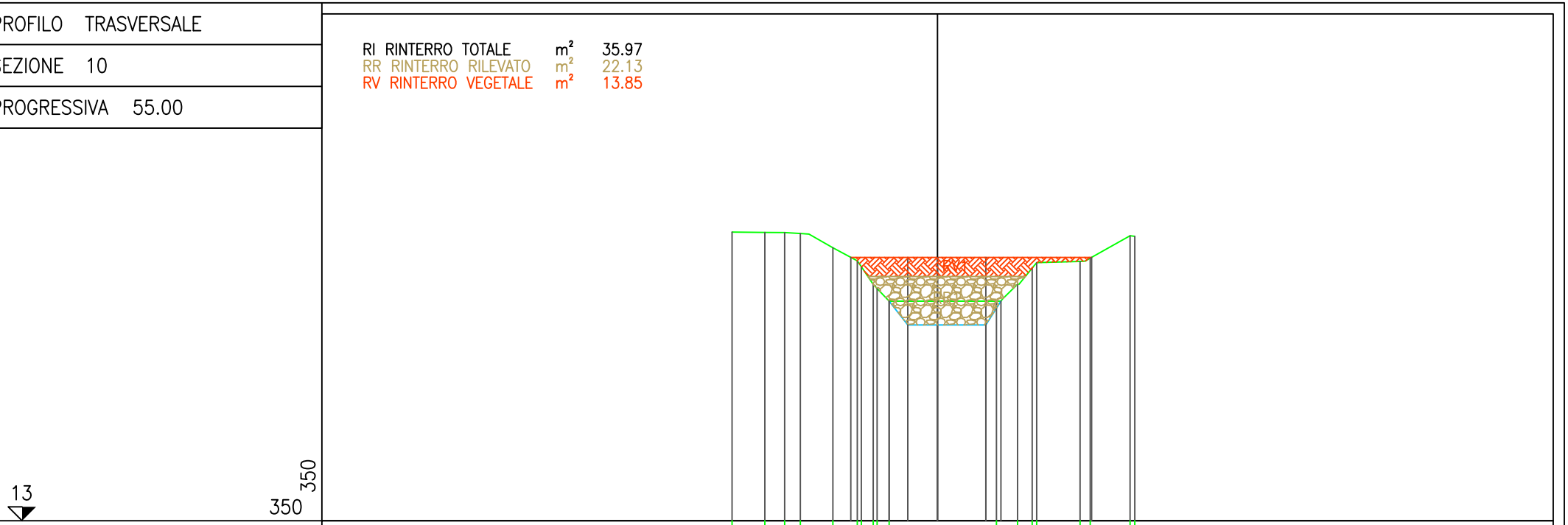


| | | | | | | | | | | | | | | | | | | | | | | | | | |
|---|---|---|---|---|---|---|---|---|---|---|---|---|---|---|---|---|---|---|---|---|---|---|---|---|---|
| PROGRESSIVE TERRENO | 12.91 | | 10.85 | | 9.60 | | 8.62 | | 6.57 | 5.04 | 4.79 | 4.04 | 3.79 | 3.04 | | 3.70 | | 5.03 | 5.95 | 6.23 | | 8.96 | 9.59 | | 12.09 | 12.40 |
| PARZIALI TERRENO | | 2.06 | 1.25 | 0.98 | | 2.05 | | 1.53 | | 0.25 | 0.75 | 0.25 | 0.75 | | 6.74 | | 1.33 | 0.92 | 0.28 | | 2.73 | | 0.63 | 2.50 | | 0.31 |
| QUOTE TERRENO | 31.14 | | 31.12 | 31.11 | 31.06 | | | 30.16 | 29.33 | 28.97 | 27.85 | 27.59 | 26.80 | | | 26.80 | | 27.87 | 28.88 | 29.22 | | 29.30 | 29.50 | | 30.91 | 30.88 |
| PROGRESSIVE FONDO | | | | | | | | | | | | -3.04 | -1.87 | | 0.00 | | 3.04 | 3.99 | | | | | | | | |
| PARZIALI FONDO | | | | | | | | | | | | 1.17 | 1.87 | | 3.04 | | 0.95 | | | | | | | | | |
| QUOTE FONDO | | | | | | | | | | | | 26.80 | 25.30 | | 25.30 | | 25.30 | 26.80 | | | | | | | | |
| PROGRESSIVE PROGETTO | | | | | | | | | | -5.45 | | -1.87 | | | 0.00 | | 3.04 | | | | | | 9.68 | | | |
| PARZIALI PROGETTO | | | | | | | | | | | 3.58 | 1.87 | | | 3.04 | | | | | 6.64 | | | | | | |
| QUOTE PROGETTO | | | | | | | | | | 29,55 | | 29,55 | | | 29,55 | | 29,55 | | | | | | 29,55 | | | |

PROFILO TRASVERSALE

SEZIONE 11

PROGRESSIVA 60.00

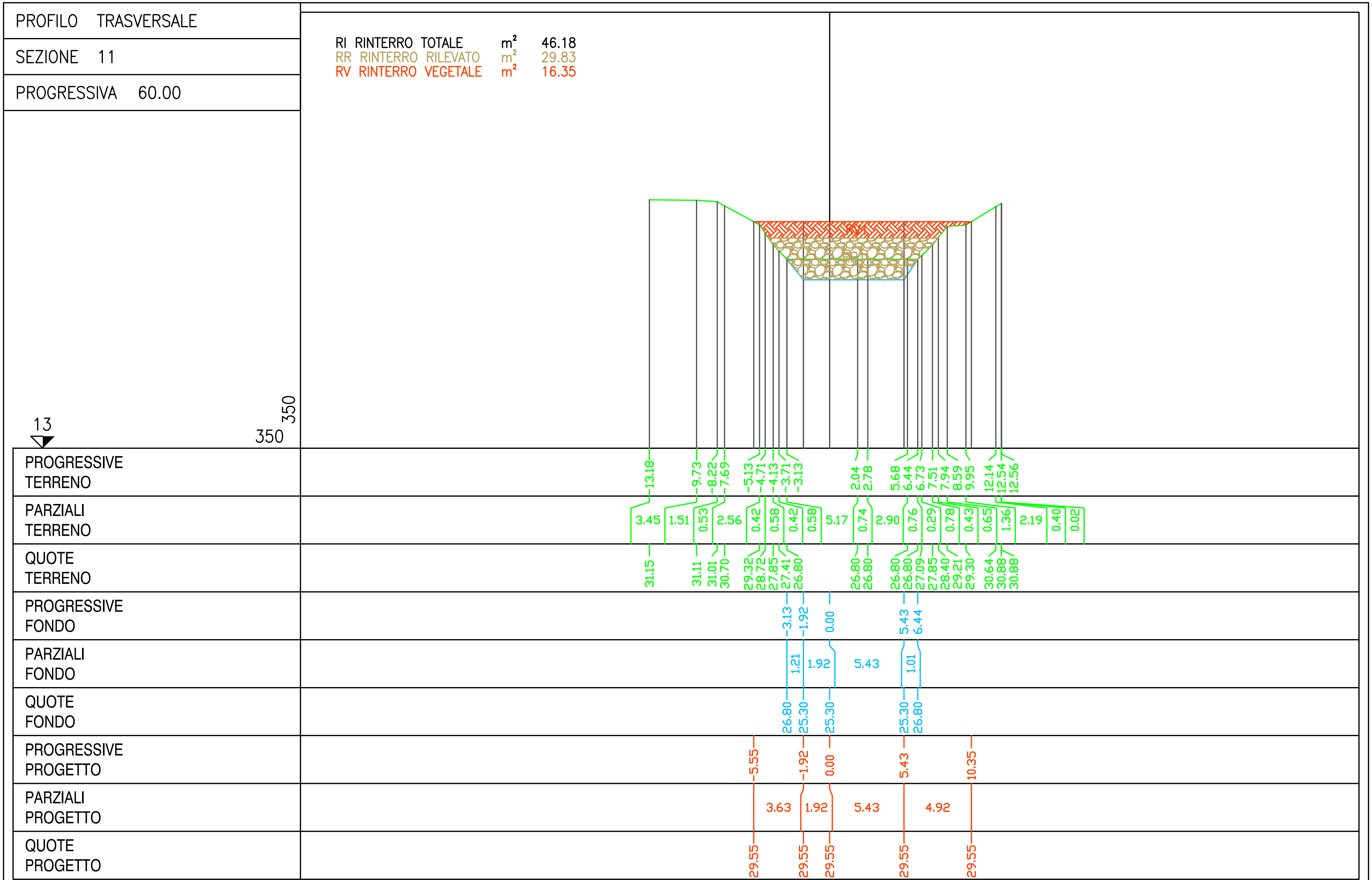

PROFILO TRASVERSALE

SEZIONE 12

PROGRESSIVA 65.00

| | | |
|---|---|---|
| RI RINTERRO TOTALE | $m^2$ | 54.42 |
| RR RINTERRO RILEVATO | $m^2$ | 36.24 |
| RV RINTERRO VEGETALE | $m^2$ | 18.19 |

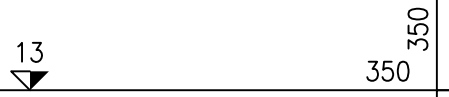


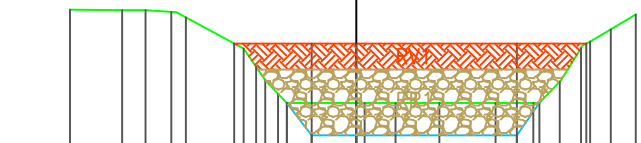

| | | | | | | | | | | | | | | | | | | | | | | | | |
|---|---|---|---|---|---|---|---|---|---|---|---|---|---|---|---|---|---|---|---|---|---|---|---|---|
| PROGRESSIVE TERRENO | 13.25 | 10.84 | 9.76 | 8.57 | 7.89 | 5.22 | 4.64 | 4.22 | 3.62 | 3.22 | 0.38 | 1.81 | 3.84 | 6.44 | 8.19 | 9.42 | 10.40 | 10.83 | 11.78 | 12.94 | | | | |
| PARZIALI TERRENO | 2.41 | 1.08 | 1.19 | 0.68 | 2.67 | 0.58 | 0.42 | 0.60 | 0.40 | 3.60 | 1.43 | 2.03 | 2.60 | 1.75 | 1.23 | 0.98 | 0.43 | 0.95 | 1.16 | | | | | |
| QUOTE TERRENO | 31.12 | 31.09 | 31.10 | 31.01 | 30.76 | 29.32 | 28.47 | 27.85 | 27.22 | 26.80 | 26.80 | 26.80 | 26.80 | 26.80 | 26.80 | 27.79 | 29.34 | 29.64 | 30.20 | 30.90 | | | | |
| PROGRESSIVE FONDO | | | | | | | | | 3.22 | 2.07 | 0.00 | | | | 7.43 | 8.47 | | | | | | | | |
| PARZIALI FONDO | | | | | | | | | 1.15 | 2.07 | 7.43 | | | | 1.04 | | | | | | | | | |
| QUOTE FONDO | | | | | | | | | 26.80 | 25.30 | 25.30 | | | | 25.30 | 26.80 | | | | | | | | |
| PROGRESSIVE PROGETTO | | | | | | | 5.65 | | | 2.07 | 0.00 | | | | 7.43 | | | | 10.65 | | | | | |
| PARZIALI PROGETTO | | | | | | | | 3.58 | | 2.07 | | 7.43 | | | | 3.22 | | | | | | | | |
| QUOTE PROGETTO | | | | | | | 29.55 | | | 29.55 | 29.55 | | | | 29.55 | | | | 29.55 | | | | | |

PROFILO TRASVERSALE

SEZIONE 13

PROGRESSIVA 70.00

| | | |
|---|---|---|
| RI RINTERRO TOTALE | $m^2$ | 54.94 |
| RR RINTERRO RILEVATO | $m^2$ | 36.63 |
| RV RINTERRO VEGETALE | $m^2$ | 18.30 |

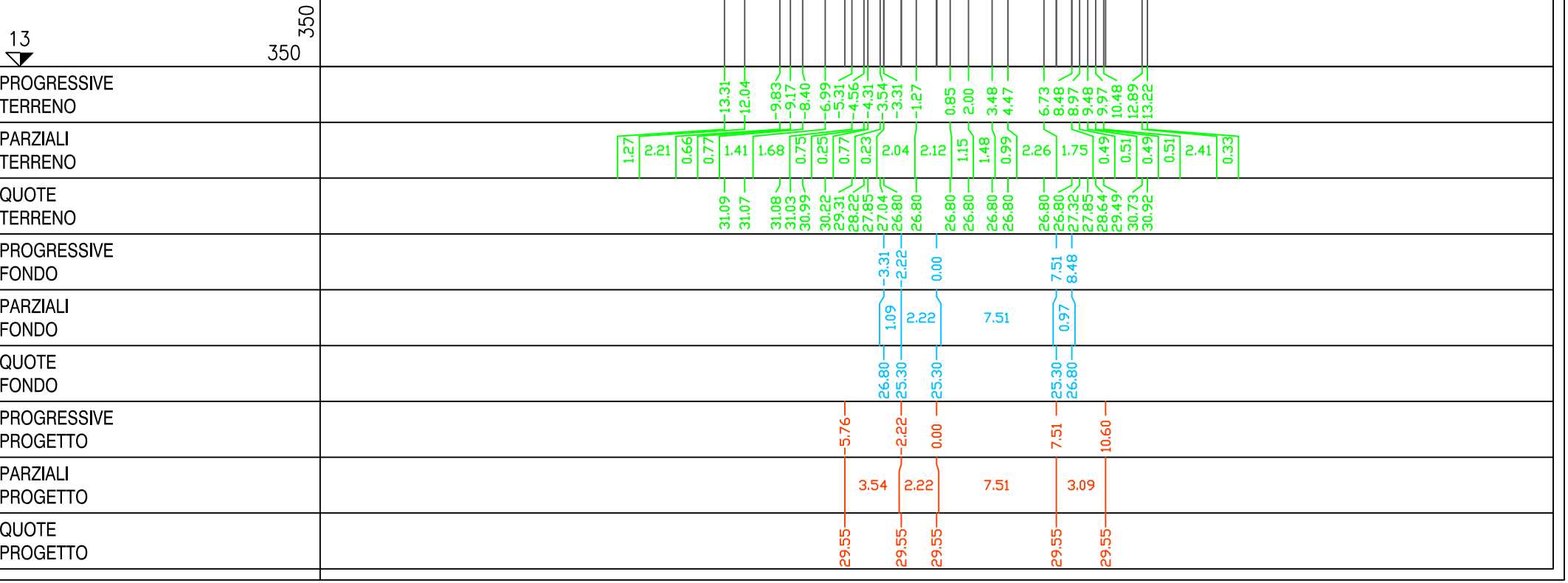

PROFILO TRASVERSALE

SEZIONE 14

PROGRESSIVA 75.00

| | | |
|---|---|---|
| RI RINTERRO TOTALE | $m^2$ | 55.44 |
| RR RINTERRO RILEVATO | $m^2$ | 37.04 |
| RV RINTERRO VEGETALE | $m^2$ | 18.40 |

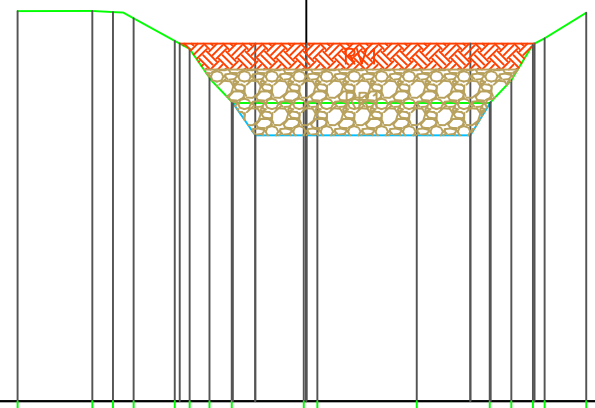

13

350

350

| | | | | | | | | | | | | | | | | | | | | | | | | | |
|---|---|---|---|---|---|---|---|---|---|---|---|---|---|---|---|---|---|---|---|---|---|---|---|---|---|
| PROGRESSIVE TERRENO | 13.36 | | 9.91 | 8.95 | 8.00 | 6.09 | 5.40 | 4.49 | 3.46 | -0.12 | 0.51 | 5.11 | 8.49 | 9.49 | 10.49 | 11.03 | 12.96 | | | | | | | | |
| PARZIALI TERRENO | | 3.45 | 0.96 | 0.95 | 1.91 | 0.69 | 0.91 | 1.03 | 3.34 | 0.63 | 4.60 | 3.38 | 1.00 | 1.00 | 0.54 | 1.93 | | | | | | | | | |
| QUOTE TERRENO | 31.05 | | 31.06 | 31.01 | 30.72 | 29.67 | 29.30 | 27.97 | 26.86 | 26.80 | 26.80 | 26.80 | 26.80 | 27.85 | 29.51 | 29.79 | 30.98 | | | | | | | | |
| PROGRESSIVE FONDO | | | | | | | | | -3.40 | -2.36 | 0.00 | | 7.59 | 8.53 | | | | | | | | | | | |
| PARZIALI FONDO | | | | | | | | | 1.04 | 2.36 | | 7.59 | | 0.94 | | | | | | | | | | | |
| QUOTE FONDO | | | | | | | | | 26.80 | 25.30 | 25.30 | | 25.30 | 26.84 | | | | | | | | | | | |
| PROGRESSIVE PROGETTO | | | | | | -5.86 | | | -2.36 | 0.00 | | | 7.59 | | 10.56 | | | | | | | | | | |
| PARZIALI PROGETTO | | | | | | | 3.50 | | 2.36 | | 7.59 | | | 2.97 | | | | | | | | | | | |
| QUOTE PROGETTO | | | | | | 29.55 | | | 29.55 | 29.55 | | | 29.55 | | 29.55 | | | | | | | | | | |

PROFILO TRASVERSALE

SEZIONE 15

PROGRESSIVA 80.00

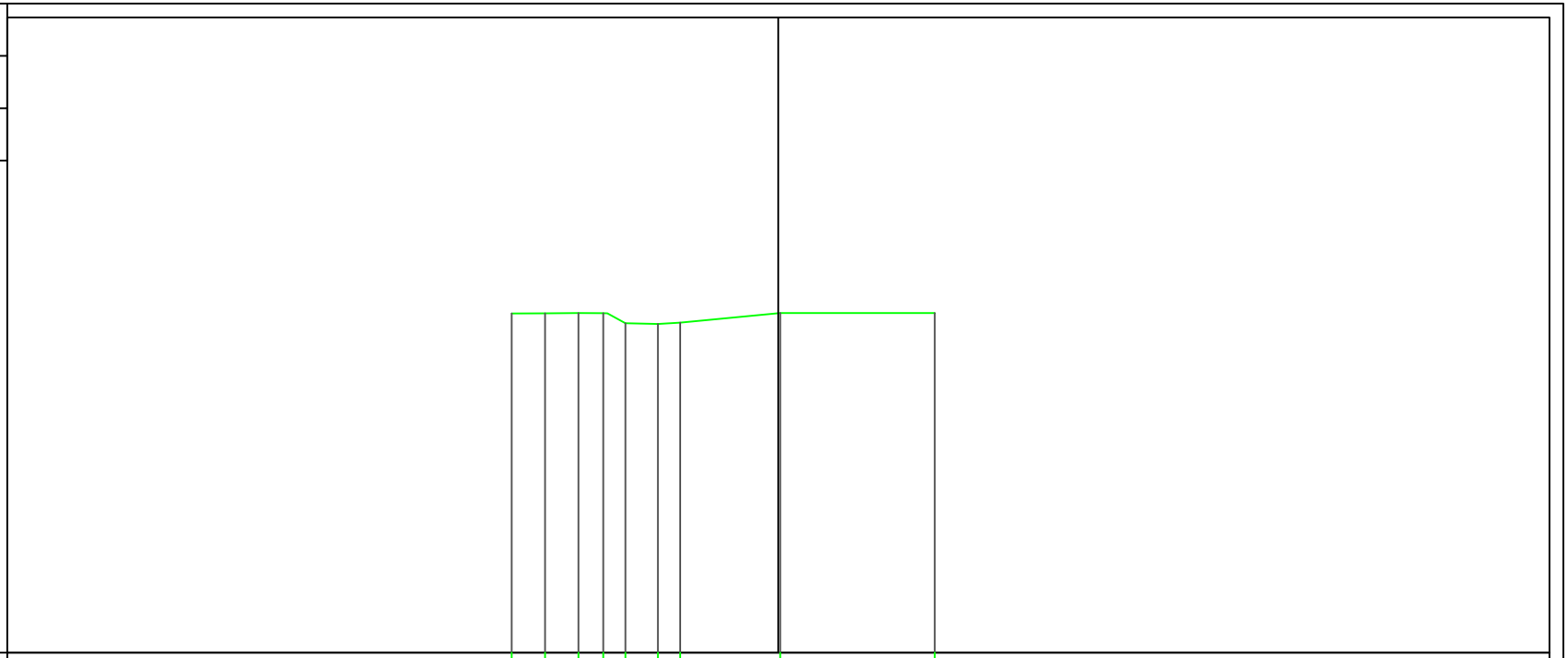


| | |
|---|---|
| PROGRESSIVE TERRENO | 13.38 11.70 10.03 8.78 7.67 6.04 4.92 0.09 7.85 |
| PARZIALI TERRENO | 1.68 1.67 1.25 1.11 1.63 1.12 5.01 7.76 |
| QUOTE TERRENO | 31.01 31.01 31.03 31.03 30.52 30.48 30.55 31.03 31.03 |
| PROGRESSIVE FONDO | |
| PARZIALI FONDO | |
| QUOTE FONDO | |
| PROGRESSIVE PROGETTO | |
| PARZIALI PROGETTO | |
| QUOTE PROGETTO | |